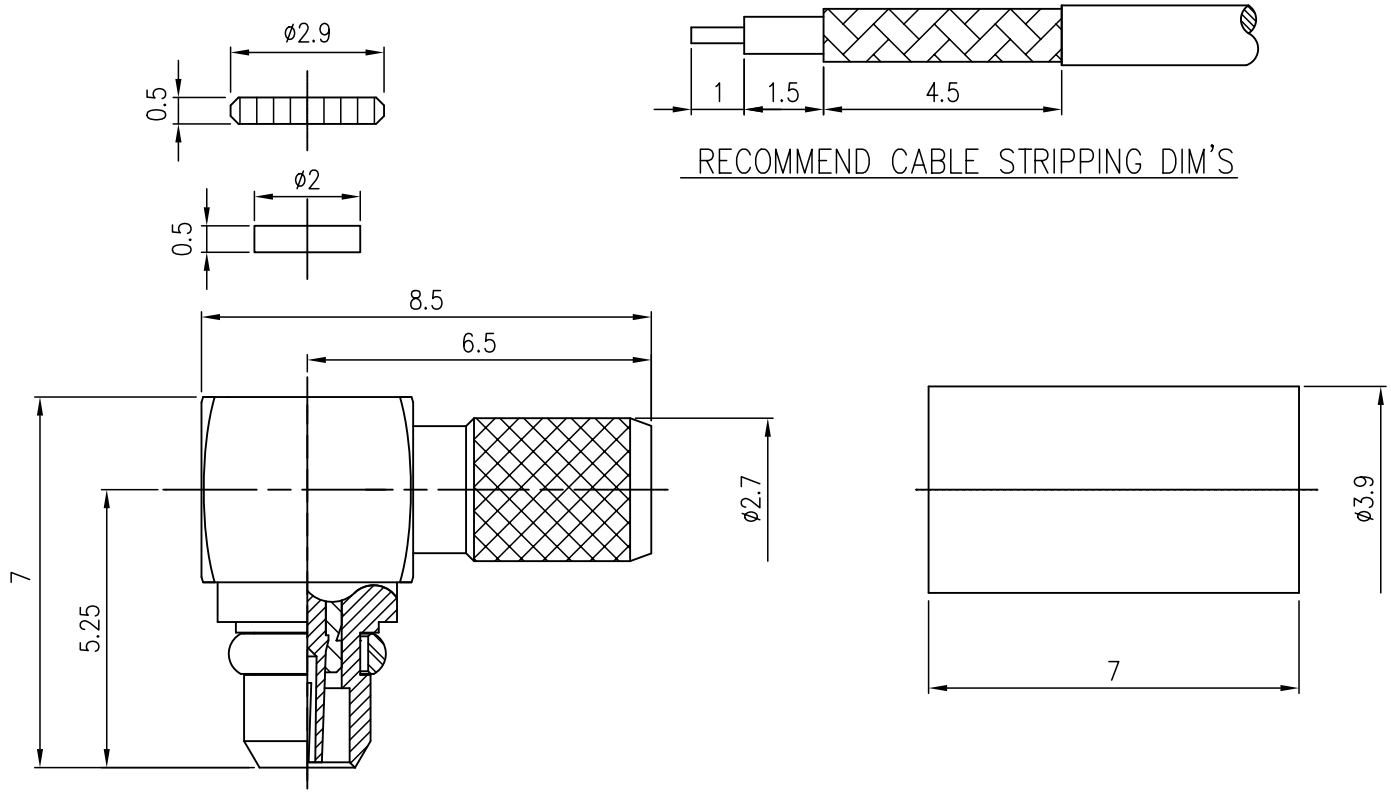


| NO. | DRAWING NO. | NAME | MATERIAL | FINISH | Q.TY |
|---|---|---|---|---|---|
| ⑦ | PA-00014 | INSULATOR | TEFLON | Da | 1 |
| ⑥ | MB-10001 | FERRULE | C2700 | Ni 100u" + Au 1u" | 1 |
| ⑤ | N/A | BODY | C3604 | Ni 100u" + Au 1u" | 1 |
| ④ | PA-00050 | INSULATOR | TEFLON | Da | 1 |
| ③ | N/A | CONTACT PIN | C5441 | Ni 100u" + Au 3u" | 1 |
| ② | MA-10039 | WASHER | C17300 | Ni 100u" + Au 1u" | 1 |
| ① | MA-10040 | COVER | C3604 | Ni 100u" + Au 1u" | 1 |

DIMENSIONS ARE IN MILLIMETERS UNLESS STATED OTHERWISE.

TOLERANCES

0.5–6 = ±0.2
6–30 = ±0.4
30–120 = ±0.6
120–315 = ±1
315–1000 = ±1.6
1000–2000 = ±2.4

| SIZE | APPROVALS | | DATE |
|---|---|---|---|
| 7 : 1 | DRAW | Nico L | 083011 |
| UNIT | CHECK | Kaven L | 083011 |
| mm | APPROVE | River H | 083011 |
| PROJECT | | | |

| | | | |
|---|---|---|---|
| TITLE | MMCX R/A CRIMP REVERSE POLARITY PLUG (FOR RG174/188A/316/U CABLE) | | |
| MODEL | MMCX-A3821101R5 | REV. | A |
| DWG No | | REV. | |

JY CHYUN

JY CHYUN ENTERPRISE CO.,LTD.