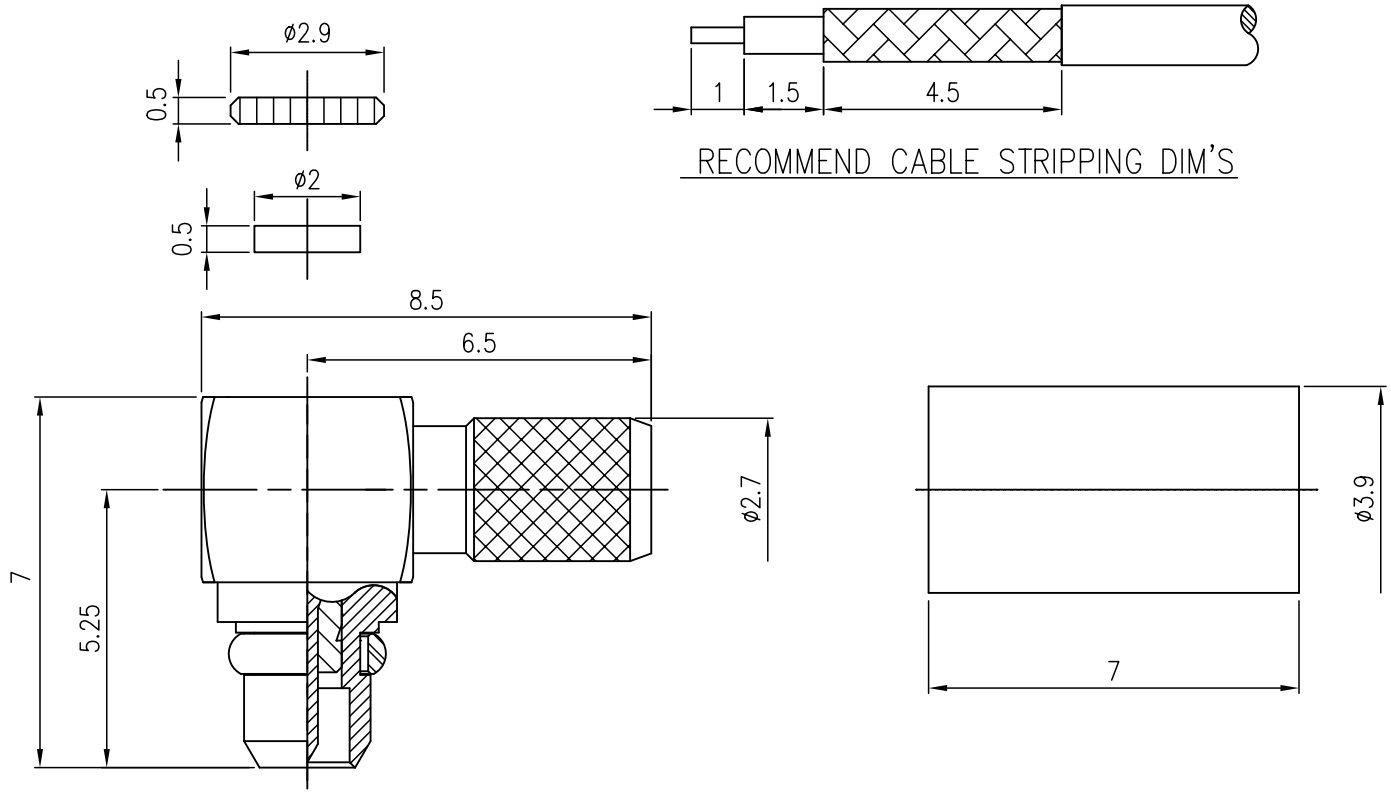

NO.	DRAWING NO.	NAME	MATERIAL	FINISH	Q.TY
⑦	PA-00014	INSULATOR	TEFLON	Da	1
⑥	MB-10001	FERRULE	C2700	Ni 100u" + Au 3u"	1
⑤	N/A	BODY	C3604	Ni 100u" + Au 3u"	1
④	PA-00013	INSULATOR	TEFLON	Da	1
③	N/A	CONTACT PIN	C3604	Ni 100u" + Au 30u"	1
②	MA-10039	WASHER	C17300	Ni 100u" + Au 3u"	1
①	MA-10040	COVER	C3604	Ni 100u" + Au 3u"	1

DIMENSIONS ARE IN MILLIMETERS UNLESS STATED OTHERWISE.
TOLERANCES
0.5–6 = ±0.2
6–30 = ±0.4
30–120 = ±0.6
120–315 = ±1
315–1000 = ±1.6
1000–2000 = ±2.4

SIZE	APPROVALS		DATE	TITLE	MMCX R/A PLUG (FOR RG174/188A/316/U CABLE)	
7 : 1				MODEL	MMCX-A5621103R5	REV. A
UNIT	DRAW	Nico L	083011	DWG No		REV.
mm	CHECK	Kaven L	083011			
PROJECT	APPROVE	River H	083011	JY CHYUN	JY CHYUN ENTERPRISE CO.,LTD.	