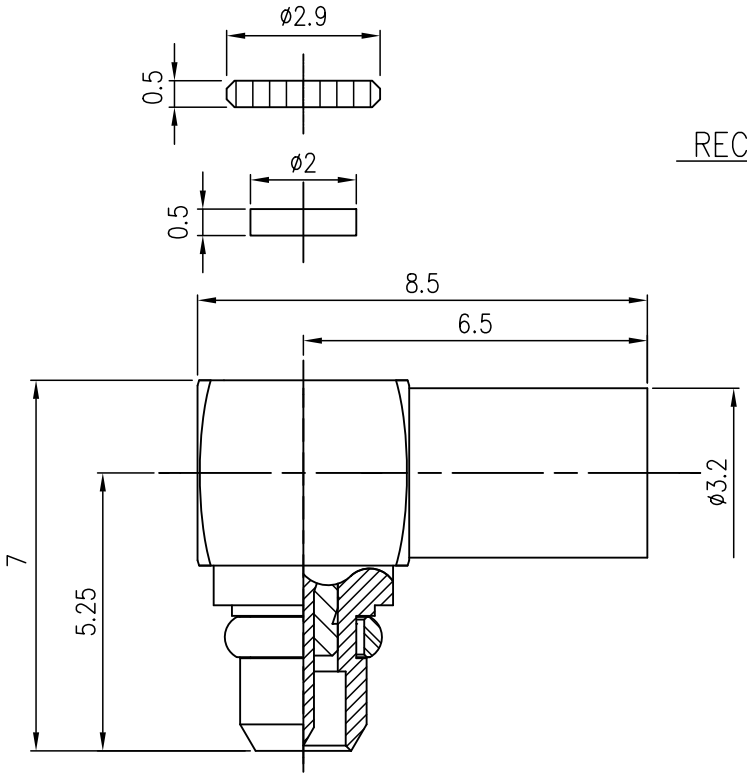

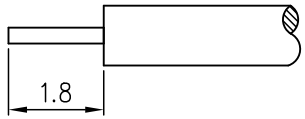

RECOMMEND CABLE STRIPPING DIM'S

NO.	DRAWING NO.	NAME	MATERIAL	FINISH	Q.TY
⑥	PA-00014	INSULATOR	TEFLON	Da	1
⑤	N/A	BODY	C3604	Ni 100u" + Au 3u"	1
④	PA-00013	INSULATOR	TEFLON	Da	1
③	N/A	CONTACT PIN	C3604	Ni 100u" + Au 30u"	1
②	MA-10039	WASHER	C17300	Ni 100u" + Au 3u"	1
①	MA-10040	COVER	C3604	Ni 100u" + Au 3u"	1

DIMENSIONS ARE IN MILLIMETERS UNLESS STATED OTHERWISE.

TOLERANCES

0.5–6 = ±0.2
6–30 = ±0.4
30–120 = ±0.6
120–315 = ±1
315–1000 = ±1.6
1000–2000 = ±2.4

SIZE	APPROVALS		DATE	TITLE	MMCX R/A SOLDER PLUG (FOR .085" , .086" SEMI-RIGID)		
7 : 1							
UNIT	DRAW	Nico L	083011	MODEL	MMCX-A5622102S3	REV.	A
mm	CHECK	Kaven L	083011	DWG No		REV.	
PROJECT							
	APPROVE	River H	083011	JY CHYUN	JY CHYUN ENTERPRISE CO.,LTD.		